Digital Electronics and μ-processors (EC2L006)

Lecture 11: Synchronous Sequential Logic

SR Latch---Recap

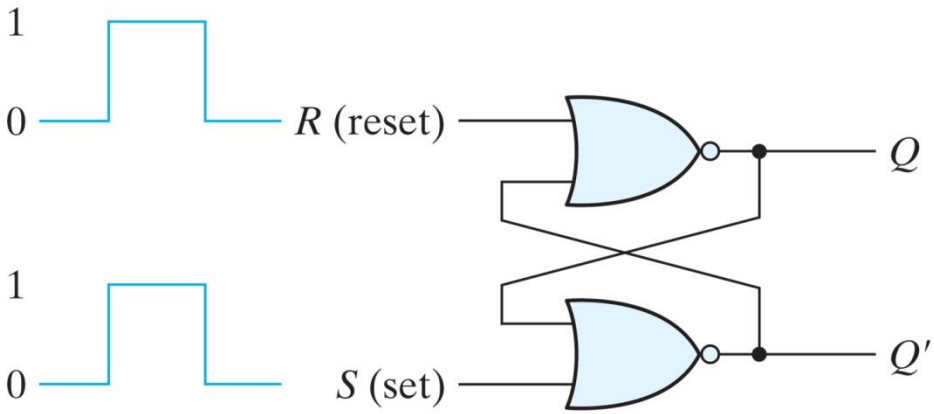

(a) Logic diagram

S	R	Q	Q'	
1	0	1	0	
0	0	1	0	(after $S = 1, R = 0$)
0	1	0	1	
0	0	0	1	(after $S = 0, R = 1$)
1	1	0	0	(forbidden)

(b) Function table

- Under normal conditions, both inputs of the latch remain at 0 unless the state has to be changed.
- The application of a momentary 1 to the *S* input causes the latch to go to the set state.
- The *S* input must go back to 0 before any other changes take place.

SR Latch---Recap

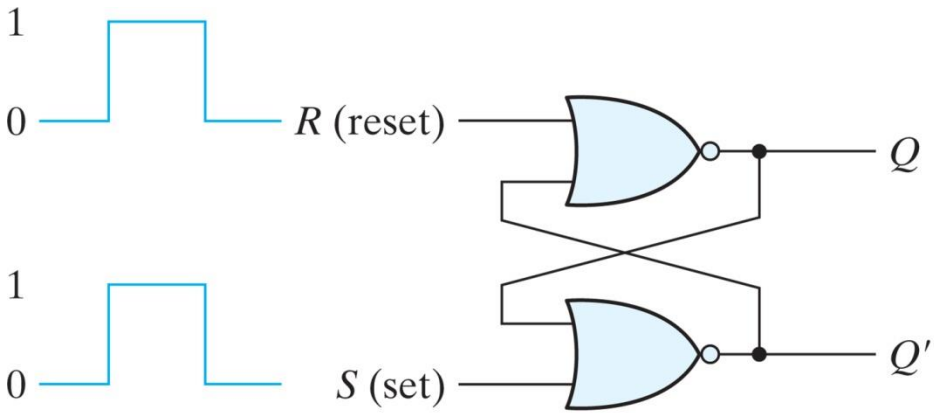

(a) Logic diagram

S	R	Q	Q'	
1	0	1	0	
0	0	1	0	(after $S = 1, R = 0$)
0	1	0	1	
0	0	0	1	(after $S = 0, R = 1$)
1	1	0	0	(forbidden)

(b) Function table

- After both inputs return to 0, it is then possible to shift to the reset state by momentary applying a 1 to the *R* input. The 1 can then be removed from *R*, where upon the circuit remains in the reset state.
- *Thus, when both inputs S and R are equal to 0, the latch can be in either the set or the reset state, depending on which input was most recently a 1.*

SR Latch / S'R' Latch

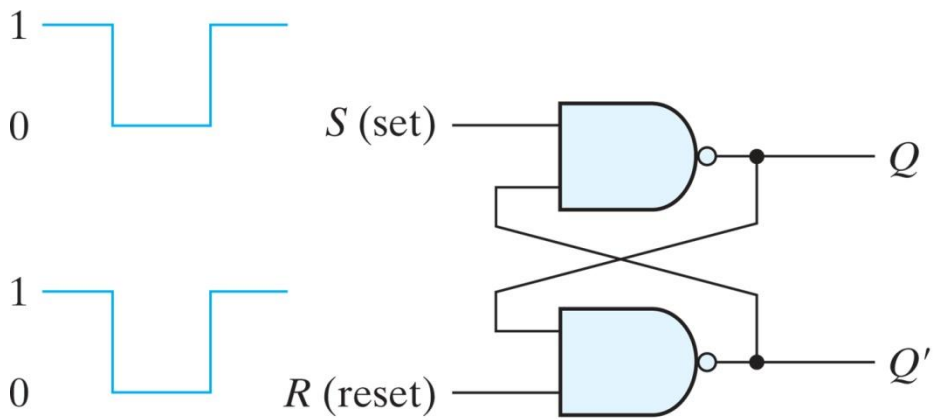

(a) Logic diagram

S	R	Q	Q'	
1	0	0	1	
1	1	0	1	(after $S = 1, R = 0$)
0	1	1	0	
1	1	1	0	(after $S = 0, R = 1$)
0	0	1	1	(forbidden)

(b) Function table

- SR latch with NAND gates requires a 0 signal to change its state.

- The inputs signals for the NAND-latch are the complement values used for the NOR latch.

SR Latch with control input

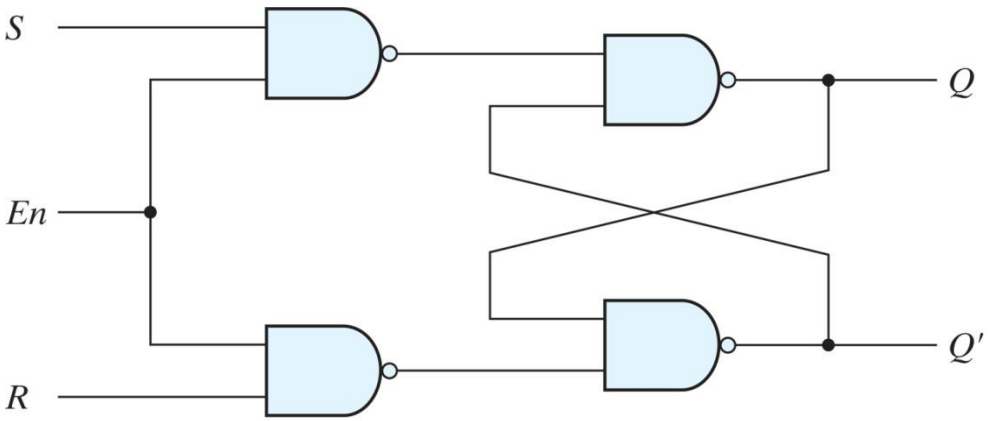

(a) Logic diagram

En	*S*	*R*	Next state of *Q*
0	X	X	No change
1	0	0	No change
1	0	1	$Q = 0$; reset state
1	1	0	$Q = 1$; set state
1	1	1	Indeterminate

(b) Function table

- The outputs of the NAND gates stay at the logic-1 level as long as the enable signal remains at 0.

D Latch (Transparent Latch)

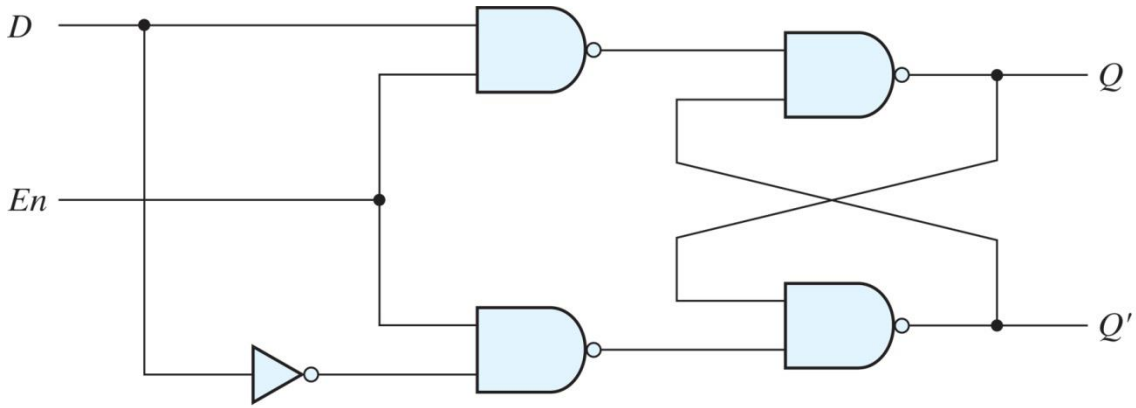

(a) Logic diagram

En	*D*	Next state of *Q*
0	X	No change
1	0	$Q = 0$; reset state
1	1	$Q = 1$; set state

(b) Function table

- *How is D-latch structurally different than the SR latch?*
- *D* latch eliminates the undesirable condition of the indeterminate state that occurs in the *SR* latch ($Q = Q' = 1$).

If $D = 1$, $Q = 1$ -> ‘set’ state

If $D = 0$, $Q = 0$ -> ‘reset’ state

D Latch (Contd.)

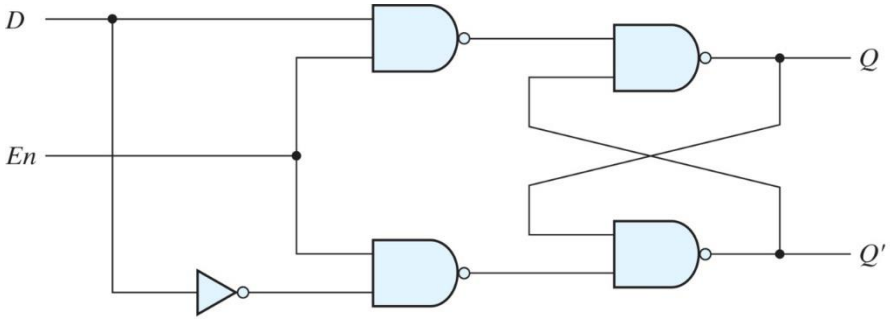

(a) Logic diagram

- The *D* latch receives that designation from its ability to hold *data* in its internal storage.
- The output follows changes in the data input as long as the enable input is asserted. This situation provides a path from input *D* to the output, and for this reason, the circuit is often called a *transparent* latch.
- When the enable input signal is de-asserted, the binary information that was present at the data input at the time the transition occurred is retained (i.e., stored) at the *Q* output until the enable input is asserted again.

Graphic Symbols for Latches

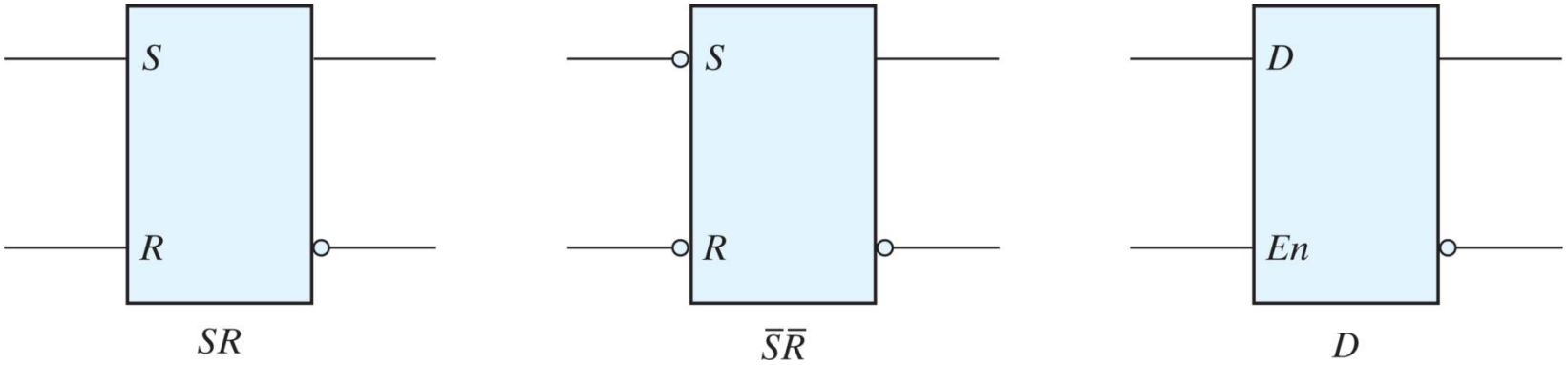

Flip-Flops

- A flip-flop is a state of a latch that can be switched by momentary change in the control input.

- This momentary change is called a trigger and the transition it causes is said to trigger the flip-flop.

- The *D*-latch is a flip-flop that is triggered every time the pulse goes to a high or logic level 1.

Edge-Triggered Flip-Flop

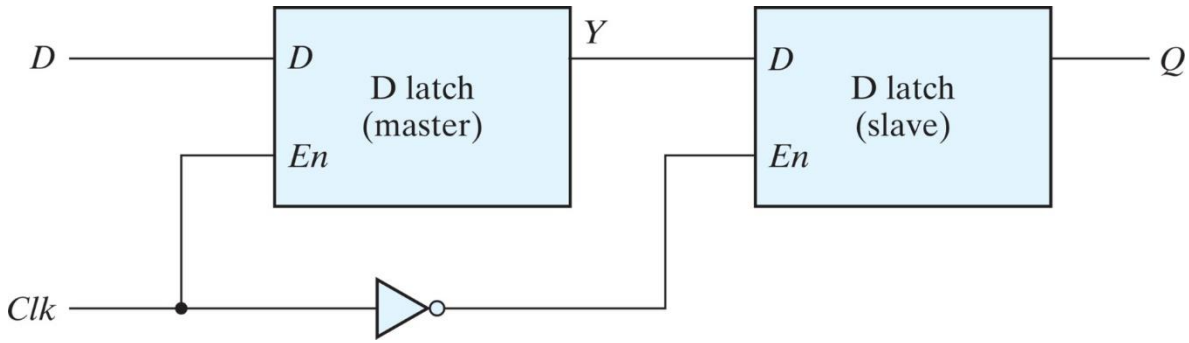

- The circuit samples the D input and changes its output at the negative edge of the clock, Clk.
- When the clock is 0, the output of the inverter is 1. The slave latch is enabled and its output *Q* is equal to the master output *Y*. The master latch is disabled (*Clk* = 0).
- When the *Clk* changes to high, *D* input is transferred to the master latch. The slave remains disabled as long as *En* is low. Any change in the input changes *Y*, but not *Q*.
- The output of the flip-flop can change when *CLK* makes a transition 1 ⟶ 0

Edge-Triggered Flip-Flop: Graphic Symbols

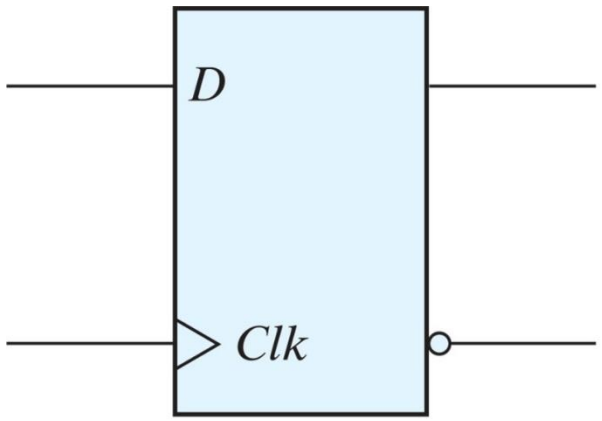

(a) Positive-edge

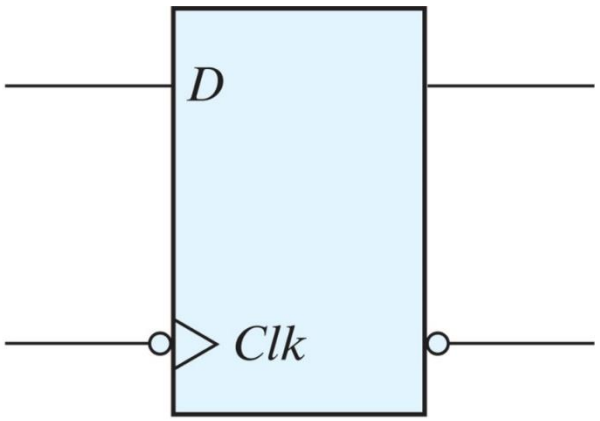

(a) Negative-edge

- The most economical and efficient flip-flop constructed is the edge-triggered *D* flip-flop since it requires the smallest number of gates.

JK Flip-Flop

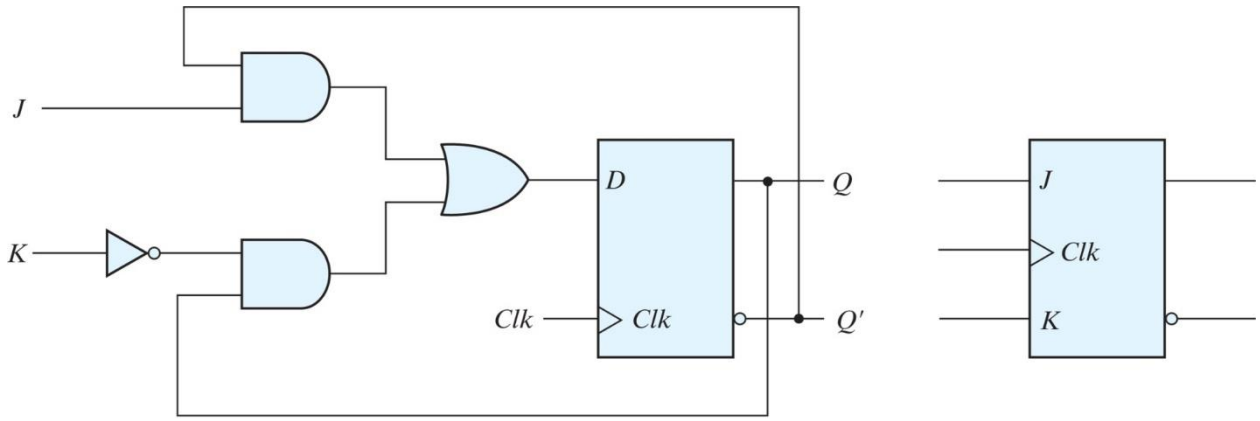

(a) Circuit diagram (b) Graphic symbol

- When $J = 1$ and $K = 0$, $D = 1$ → next clock edge sets output to 1.
- When $J = 0$ and $K = 1$, $D = 0$ → next clock edge resets output to 0.
- When $J = 1$ and $K = 1$, $D = Q'$ → next clock edge complements output.
- When $J = 0$ and $K = 0$, $D = Q$ → next clock edge leaves output unchanged.

T Flip-Flop

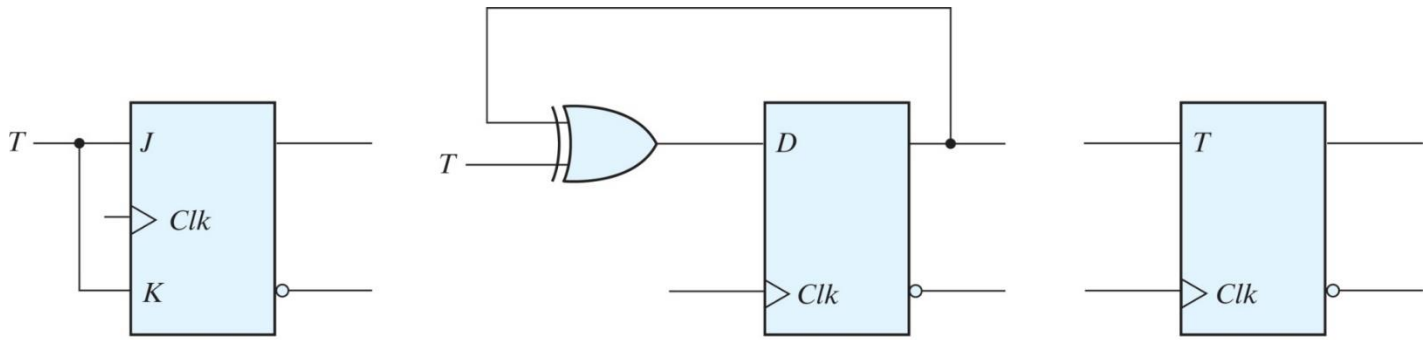

(a) From *JK* flip-flop (b) From *D* flip-flop (c) Graphic symbol

- The *T* (toggle) flip-flop is a complementing flip-flop and can be obtained from a *JK* flip-flop when inputs *J* and *K* are tied together.
- When $T = 0$ ($J = K = 0$), a clock edge does not change the output. When $T = 1$ ($J = K = 1$), a clock edge complements the output.
- The *T* flip-flop can also be constructed with a *D* flip-flop and an exclusive-OR gate.

Characteristic Tables and Equations

Flip-Flop Characteristic Tables

JK Flip-Flop

J	*K*	Q (t + 1)	
0	0	$Q(t)$	No change
0	1	0	Reset
1	0	1	Set
1	1	$Q'(t)$	Complement

D Flip-Flop

D	Q (t + 1)	
0	0	Reset
1	1	Set

T Flip-Flop

T	Q (t + 1)	
0	$Q(t)$	No change
1	$Q'(t)$	Complement

Thank you!!!